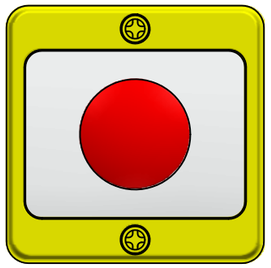

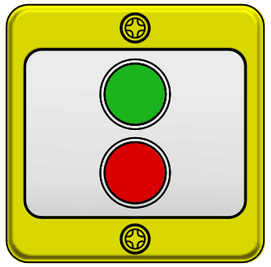

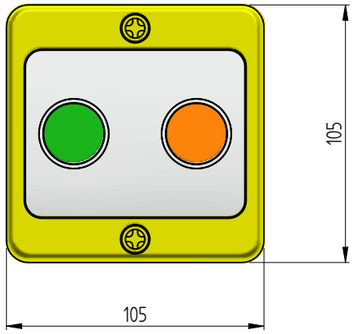


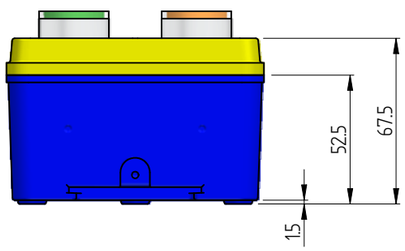


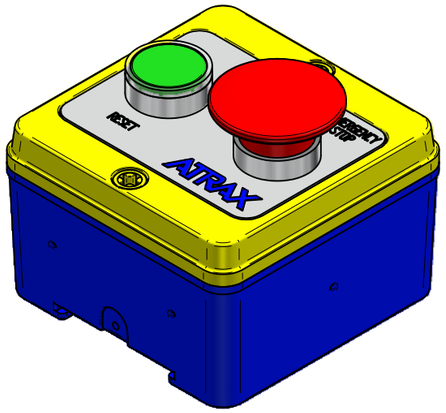


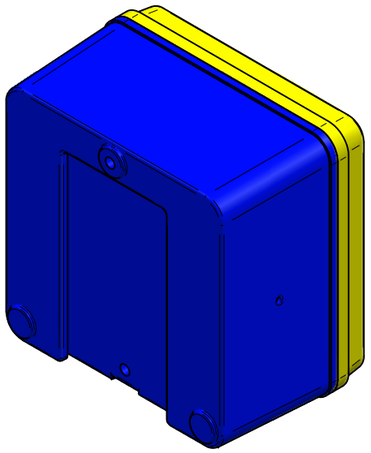

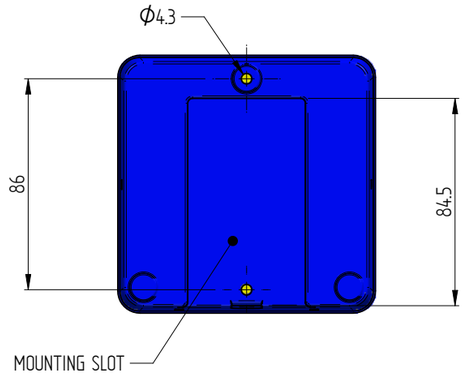


VIEW ON REAR:
SCALE: 1:2.5

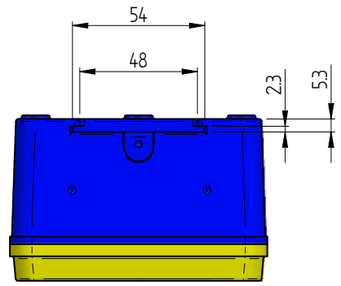


VIEW ON SLOT
SCALE: 1:2.5

| | | | | | | | | | | | |
|---|---|---|---|---|---|---|---|---|---|---|---|
| 3RD ANGLE PROJECTION | ATRAX | FINISH: – | | | | | | | | MATERIAL AS NOTED | PART NO. |
| | | | | | | | | | SCALE N.T.S | PRODUCT: MULTI-USE ENCLOSURE BOX | E-BOX-105-105-LP |
| UNITS: mm | 390A Church St, Penrose | | | | | | | | DRG. N.SMITH | | SHEET 1 OF 2 |
| A3 | Auckland, New Zealand | | | | | | | | DATE 31/5/11 | DRAWING TITLE: GENERAL ASSEMBLY | DRG NO. AT020686A / ISSUE P1 |
| | PO Box 11 087 Ellerslie, Auckland | | | | NGS | – | P1 | 6/7/13 | APP. K.M. | | |
| | Ph 64-9-634 5337 Fax 64-9-634 5339 | BY | ECN | ISSUE | DATE | BY | ECN | ISSUE | DATE | DATE 31/5/11 | |

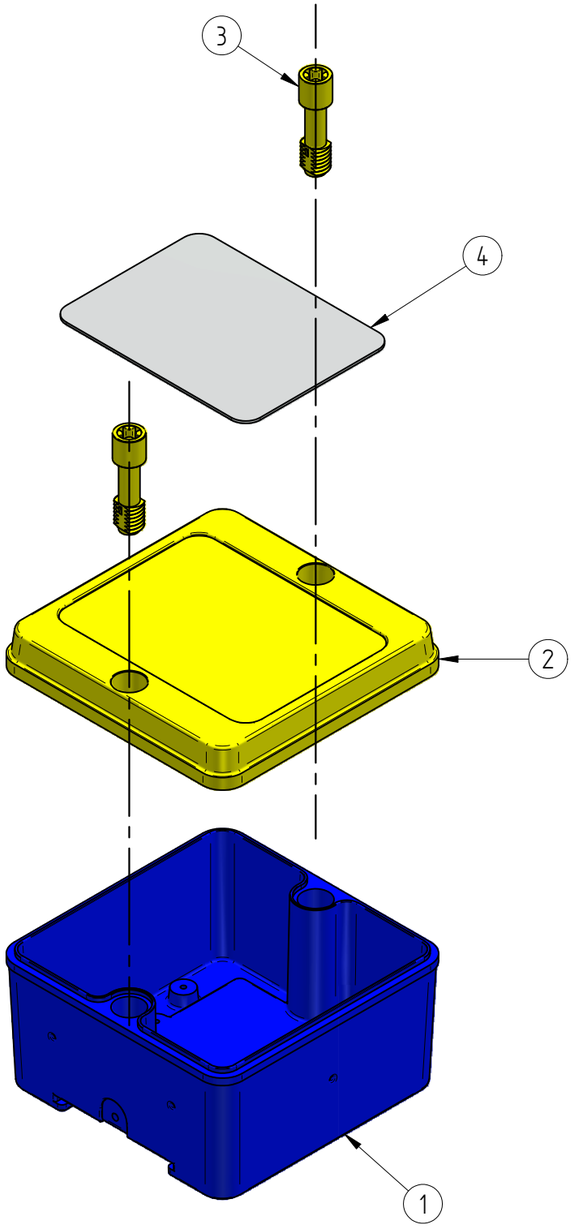


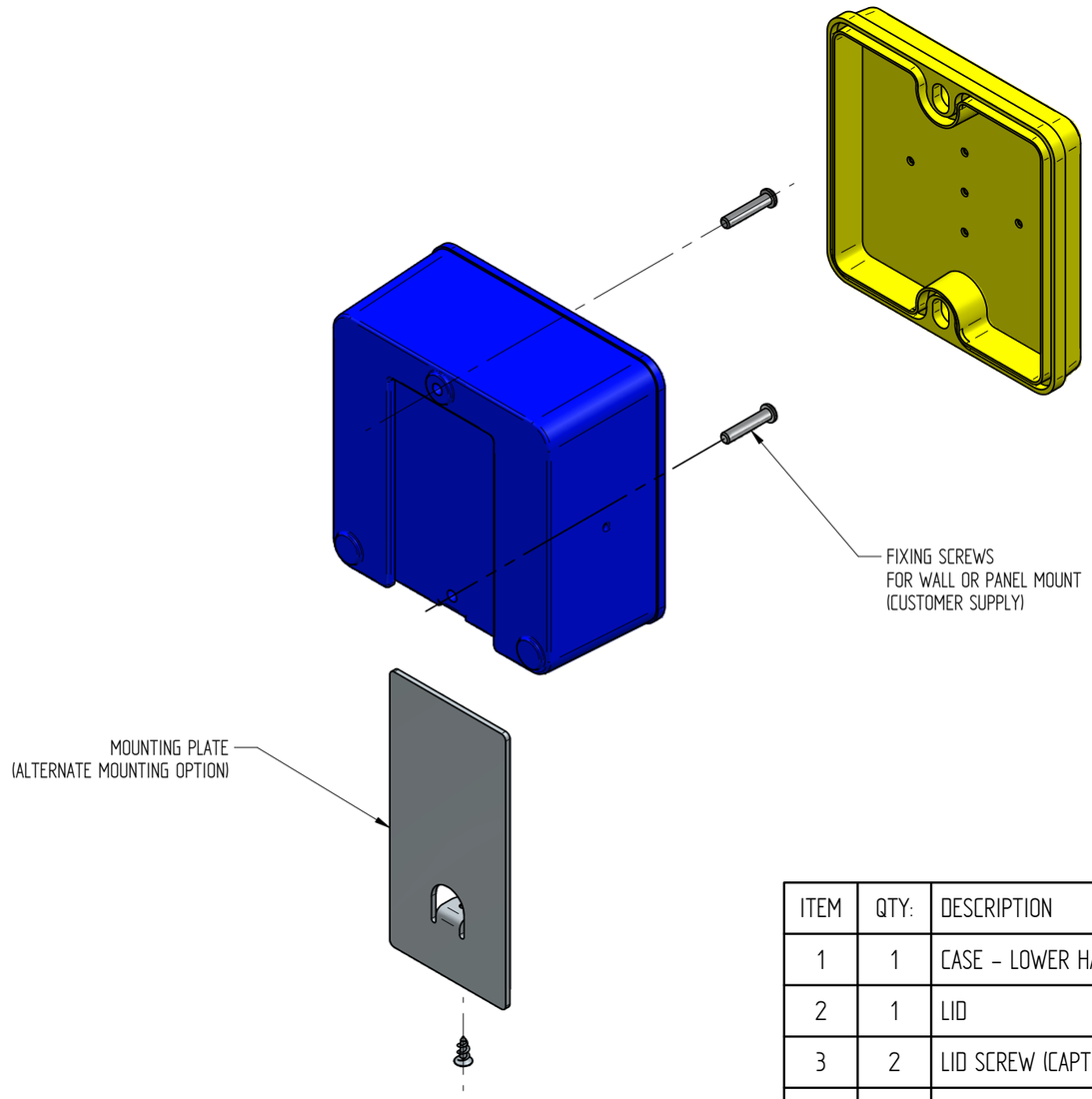


| ITEM | QTY: | DESCRIPTION | MATL: |
|---|---|---|---|
| 1 | 1 | CASE - LOWER HALF | ABS Plastic, high impact |
| 2 | 1 | LID | ABS Plastic, high impact |
| 3 | 2 | LID SCREW (CAPTIVE) | ABS Plastic, high impact |
| 4 | 1 | LABEL - 89.5 x 68 | Polycarbonate |

NOTES:
BOXES DESIGNED TO MEET:
TUV-IP65, UL-TYPE 4
ROHS COMPLIANT

3RD ANGLE PROJECTION

UNITS: mm

A3

ATRAX
390A Church St, Penrose
Auckland, New Zealand
PO Box 11 087 Ellerslie, Auckland
Ph 64-9-634 5337 Fax 64-9-634 5339

FINISH: –

| BY | ECN | ISSUE | DATE | BY | ECN | ISSUE | DATE |
|---|---|---|---|---|---|---|---|
| | | | | NGS | – | P1 | 6/7/13 |

SCALE N.T.S

| | |
|---|---|
| DRG. | N.SMITH |
| DATE | 6/7/13 |
| APP. | |
| DATE | |

MATERIAL

PRODUCT
MULTI-USE ENCLOSURE BOX

DRAWING TITLE
GENERAL ASSEMBLY

PART NO.
E-BOX-105-105-LP

SHEET 2 OF 2

DRG NO.
AT020686A

ISSUE
P1